VK-CM-RZ/G2LC

ver. 1.2

Renesas Electronics RZ/G2LC
Dual core ARM Cortex-A55, Cortex-M33

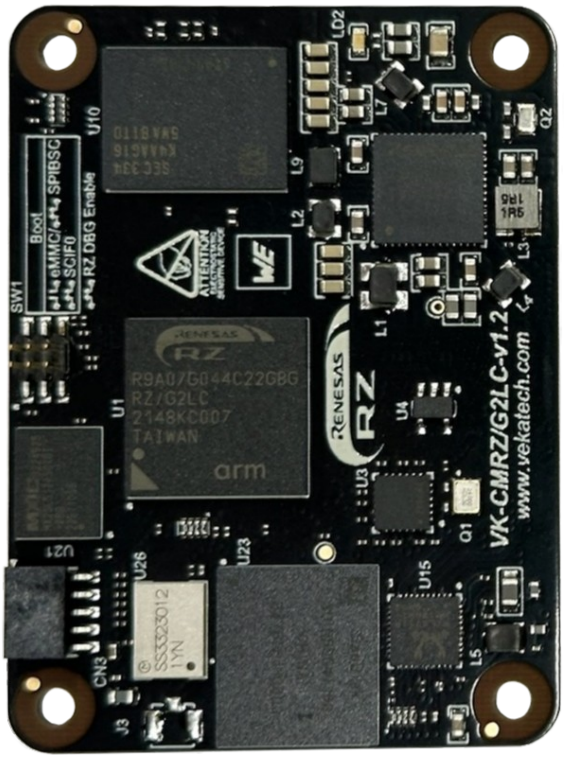

R9A07G044C22GBG
- 1.2GHz, 361pins BGA, Fanless

On board RAM
- 512MB up to 2GB DDR4, 1.6GHz

On board ROM
- (16 up to 64)MB QSPI, 133MHz, NOR Flash
- (8 up to 128)GB - eMMC, 200MHz, NAND Flash

WiFi + BLE
- module Murata Type 1YN

Ethernet
- 1x PHY RTL8211F

Connectors
- 1x JTAG (10pin)
- 2x Molex (100pin)

Operating temperature:
- -40° ... +85°

Dimensions:
- 40 mm x 55 mm
- Mounting holes 4 x Ø2,7 mm

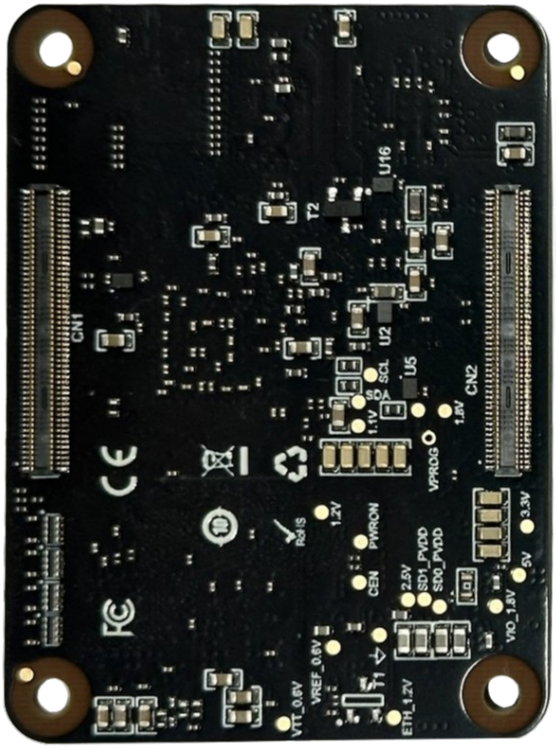

Vekatech Ltd.

63, Nestor Abadzhiev str.
4023 Plovdiv
Bulgaria
Tel.: +359 (0) 32 262362
info@vekatech.com

Sep. 2024

www.vekatech.com

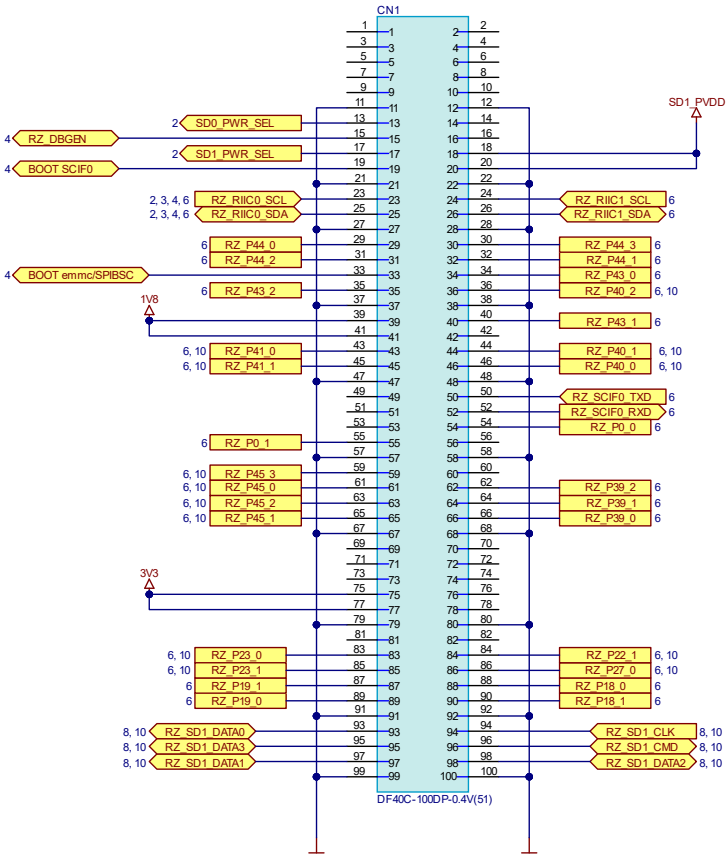

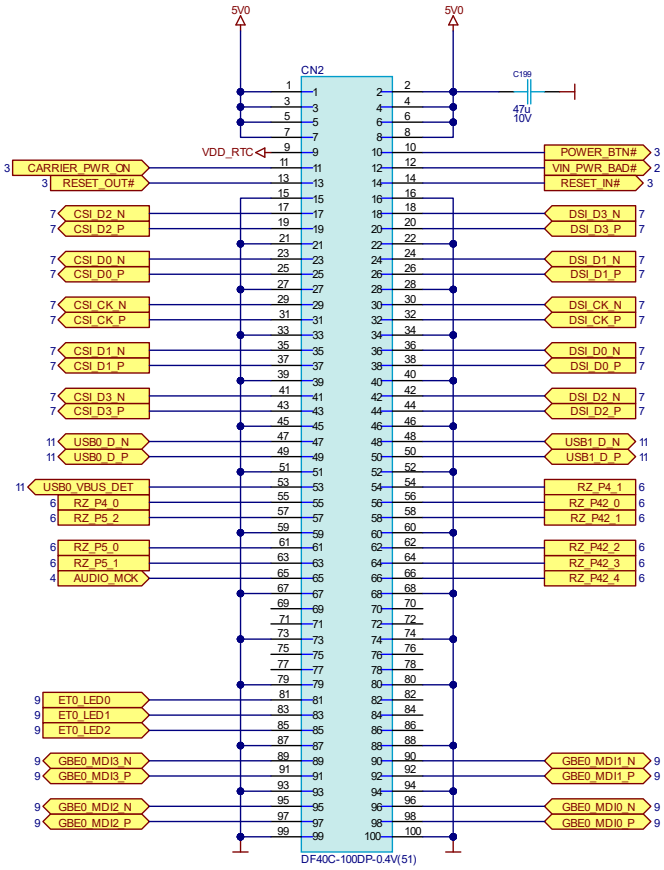

Interfaces	Channels	Port	F0	F1	F2	F3	F4	F5
UART	1	P38		SCIF0_x				
I2C	2	–	–	–	–	–	–	–
USB	2	–	–	–	–	–	–	–
ETH	1	P20 – P28		ET0_x				
SD1	1 *	–	–	–	–	–	–	–
MIPI CSI	1	–	–	–	–	–	–	–
MIPI DSI	1	–	–	–	–	–	–	–
GPIO	39	Pxx						

Note:

* If **WiFi + BLE** is populated, corresponding Interfaces and Ports (colored in red) are occupied by the module, and user can`t use them !

63, Nestor Abadzhiev str.
4023 Plovdiv
Bulgaria
Tel.: +359 (0) 32 262362
info@vekatech.com

from – to	Bits	Port_Bit	F0	F1	F2	F3	F4	F5
P0_0 – P0_1	2	0_0	GPIO	IRQ0	SCI0_RXD	GTIOC0A	MTIOC0A	SCIF3_TXD
		0_1	GPIO	IRQ1	SCI0_TXD	GTIOC0B	MTIOC0B	SCIF3_RXD
P4_0 – P4_1	2	4_0	GPIO	USB0_VBUSEN	SCIF2_TXD	MTIOC7A	ADC_TRG	–
		4_1	GPIO	–	SCIF2_RXD	MTIOC7B	–	–
P5_0 – P5_2	3	5_0	GPIO	USB0_OVRCUR	SCIF2_SCK	MTIOC7C	SSI2_BCK	–
		5_1	GPIO	USB0_OTG_ID	SCIF2_CTS#	MTIOC7D	SSI2_RCK	–
		5_2	GPIO	USB0_OTG_EXICEN	SCIF2_RTS#	–	SSI2_DATA	–
P18_0 – P18_1	2	18_0	GPIO	SD0_CD	GTIOC0A	RIIC3_SDA	MTIOC2A	–
		18_1	GPIO	SD0_WP	GTIOC0B	RIIC3_SCL	MTIOC2B	–
P19_0 – P19_1	2	19_0	GPIO	SD1_CD	GTIOC3A	MTIOC1A	RIIC2_SDA	–
		19_1	GPIO	SD1_WP	GTIOC3B	MTIOC1B	RIIC2_SCL	–
P22_1	1 *	22_1	GPIO	ET0_TX_ERR	SSI0_RCK	CAN1_RX	MTCLKB	–
P23_0 – P23_1	2 *	23_0	GPIO	ET0_TX_COL	SSI0_TXD	CAN1_TX_DATARATE_EN	MTCLKC	–
		23_1	GPIO	ET0_TX_CRS	SSI0_RXD	CAN1_RX_DATARATE_EN	MTCLKD	–
P27_0	1 *	27_0	GPIO	ET0_RX_ERR	RSPI1_MISO	MTIOC8C	–	–
P39_0 – P39_2	3	39_0	GPIO	SCIF0_SCK	GTETRGC	CAN0_RX	MTIOC4C	–
		39_1	GPIO	SCIF0_CTS#	GTETRGD	CAN0_TX_DATARATE_EN	MTIOC4D	–
		39_2	GPIO	SCIF0_RTS#	–	CAN0_RX_DATARATE_EN	–	–
P40_0 – P40_2	3 *	40_0	GPIO	SCIF1_TXD	GTIOC6A	CAN1_TX	MTIC5U	SCI0_RXD
		40_1	GPIO	SCIF1_RXD	GTIOC6B	CAN1_RX	MTIC5V	SCI0_TXD
		40_2	GPIO	SCIF1_SCK	–	CAN1_TX_DATARATE_EN	MTIC5W	SCI0_SCK
P41_0 – P41_1	2 *	41_0	GPIO	SCIF1_CTS#	GTIOC7A	CAN1_RX_DATARATE_EN	GTIOC3A	SCI0_CTS#/RTS#
		41_1	GPIO	SCIF1_RTS#	GTIOC7B	–	GTIOC3B	–
P42_0 – P42_4	5	42_0	GPIO	USB1_VBUSEN	RSPI2_CK	CAN_CLK	SCIF2_TXD	MTIOC7A
		42_1	GPIO	USB1_OVRCUR	RSPI2_MOSI	CAN0_TX	SCIF2_RXD	MTIOC7B
		42_2	GPIO	ADC_TRG	RSPI2_MISO	CAN0_RX	SCIF2_SCK	MTIOC7C
		42_3	GPIO	RIIC2_SDA	RSPI2_SSL	CAN0_TX_DATARATE_EN	SCIF2_CTS#	MTIOC7D
		42_4	GPIO	RIIC2_SCL	CAM_FIELD	CAN0_RX_DATARATE_EN	SCIF2_RTS#	–
P43_0 – P43_2	3	43_0	GPIO	RSPI0_CK	GTIOC4A	GTIOC6A	IRQ4	MTIOC8A
		43_1	GPIO	RSPI0_MOSI	GTIOC4B	GTIOC6B	IRQ5	MTIOC8B
		43_2	GPIO	RSPI0_MISO	GTIOC5A	–	IRQ6	MTIOC8C
P44_0 – P44_3	4	44_0	GPIO	RSPI1_CK	SSI1_BCK	CAN1_TX	MTIOC3A	GTIOC6A
		44_1	GPIO	RSPI1_MOSI	SSI1_RCK	CAN1_RX	MTIOC3B	GTIOC6B
		44_2	GPIO	RSPI1_MISO	SSI1_TXD	CAN1_TX_DATARATE_EN	MTIOC3C	GTIOC7A
		44_3	GPIO	RSPI1_SSL	SSI1_RXD	CAN1_RX_DATARATE_EN	MTIOC3D	GTIOC7B
P45_0 – P45_3	4 *	45_0	GPIO	SSI0_BCK	POE0#	SCI1_RXD	–	–
		45_1	GPIO	SSI0_RCK	POE4#	SCI1_TXD	–	–
		45_2	GPIO	SSI0_TXD	POE8#	SCI1_SCK	–	–
		45_3	GPIO	SSI0_RXD	POE10#	SCI1_CTS#/RTS#	–	–